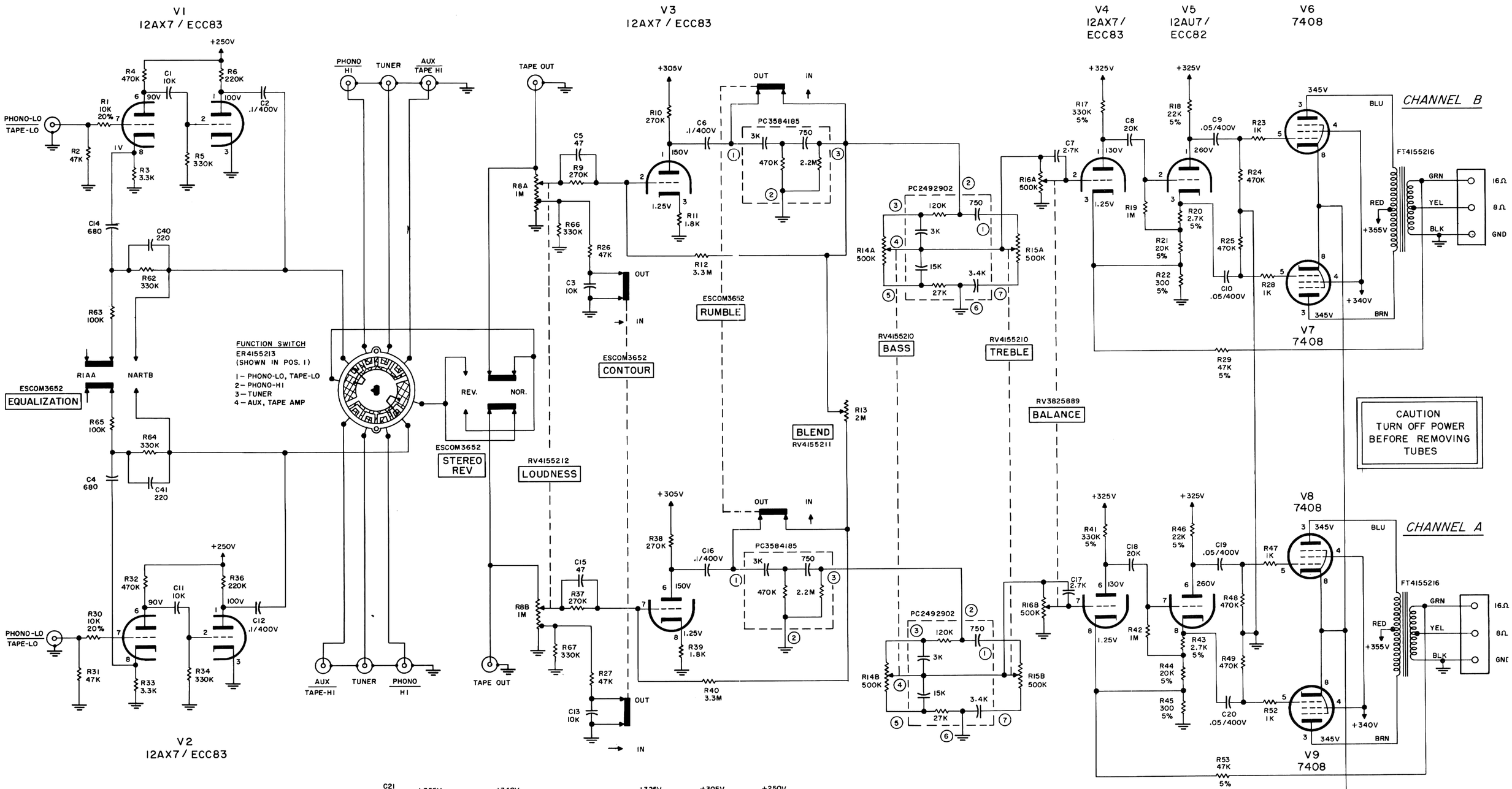

RESISTANCE READINGS

ITEM	TUBE	PIN 1	PIN 2	PIN 3	PIN 4	PIN 5	PIN 6	PIN 7	PIN 8	PIN 9
V1	12AX7	—	330K	0	—	—	—	5.7K	3.3K	—
V2	12AX7	—	330K	0	—	—	—	5.7K	3.3K	—
V3	12AX7	—	700K	1.8K	—	—	—	700K	1.8K	—
V4	12AX7	—	—	300Ω	—	—	—	—	300Ω	—
V5	12AU7	—	1M	23K	—	—	—	1M	23K	—
V6	7408	—	—	—	—	500K	—	—	—	—
V7	7408	—	—	—	—	500K	—	—	—	—
V8	7408	—	—	—	—	500K	—	—	—	—
V9	7408	—	—	—	—	500K	—	—	—	—

VOLTAGE & RESISTANCE READING
FUNCTION SWITCH IN TUNER POSITION.
BASS & TREBLE CONTROLS FLAT.
BALANCE CONTROL IN CENTER.
LOUDNESS CONTROL MAX CW POSITION.
BLEND IN STEREO POSITION.

NOTES
UNLESS OTHERWISE SPECIFIED—
1- ALL RESISTANCE VALUES IN OHMS ± 10%.
2- ALL RESISTORS 1/2 WATT.
3- ALL CAPACITORS WITH DECIMAL VALUES IN MFD.
4- ALL CAPACITORS WITHOUT DECIMAL VALUES IN MMF.
5- ALL VOLTAGES ARE DC & MAY VARY ± 20%.

S488
S4155331D

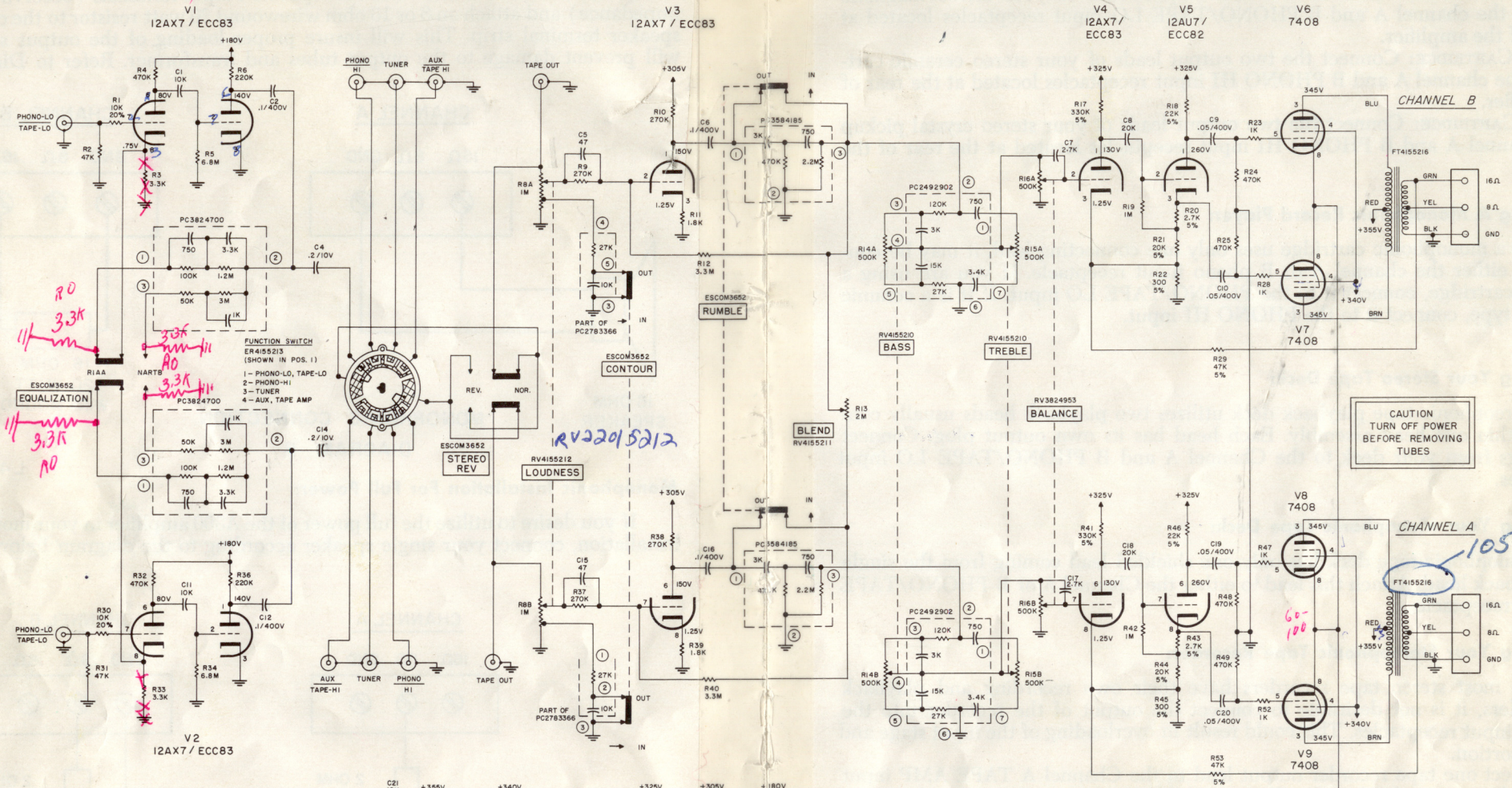

RESISTANCE READINGS

ITEM	TUBE	PIN 1	PIN 2	PIN 3	PIN 4	PIN 5	PIN 6	PIN 7	PIN 8	PIN 9
V1	12AX7	—	6.8M	0	—	—	—	5.7K	3.3K	—
V2	12AX7	—	6.8M	0	—	—	—	5.7K	3.3K	—
V3	12AX7	—	700K	1.8K	—	—	—	700K	1.8K	—
V4	12AX7	—	—	300Ω	—	—	—	—	300Ω	—
V5	12AU7	—	1M	23K	—	—	—	1M	23K	—
V6	7408	—	—	—	—	500K	—	—	—	—
V7	7408	—	—	—	—	500K	—	—	—	—
V8	7408	—	—	—	—	500K	—	—	—	—
V9	7408	—	—	—	—	500K	—	—	—	—

VOLTAGE & RESISTANCE READING
FUNCTION SWITCH IN TUNNER POSITION.
BASS & TREBLE CONTROLS FLAT.
BALANCE CONTROL IN CENTER.
LOUDNESS CONTROL MAX CW POSITION.
BLEND IN STEREO POSITION.

NOTES

UNLESS OTHERWISE SPECIFIED—
1- ALL RESISTANCE VALUES IN OHMS ± 10%.
2- ALL RESISTORS 1/2 WATT.
3- ALL CAPACITORS WITH DECIMAL VALUES IN MFD.
4- ALL CAPACITORS WITHOUT DECIMAL VALUES IN MMF.
5- ALL VOLTAGES ARE DC & MAY VARY ± 20%.